Brake Calipers HW 150 HFA and HW 180 HFA

hydraulically activated – spring released

EDMAYR ANTRIEBSTECHNIK

Features	Code
Brake Caliper	H
Standard	W
With piston diameter 2 x 75 mm or piston diameter 2 x 90 mm	150 180
Hydraulically activated	H
Spring released	F
Automatic adjustment to accommodate friction block wear	A
Max. clamping force 140 kN (HW 150) Max. clamping force 200 kN (HW 180)	140 200

Example for ordering

Brake Caliper HW 150 HFA,
max. clamping force 140 kN:

HW 150 HFA - 140

Technical Data

Brake Caliper HW 150 HFA

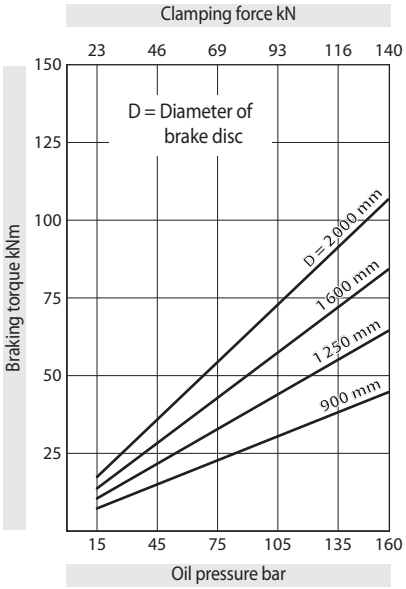

The braking torques shown in the diagram are based on a theoretical friction coefficient of 0,4.

Oil pressure:	min. 15 bar max. 160 bar
Oil volume:	max. 265 cm^3
Weight:	ca. 65 kg

Brake Caliper HW 180 HFA

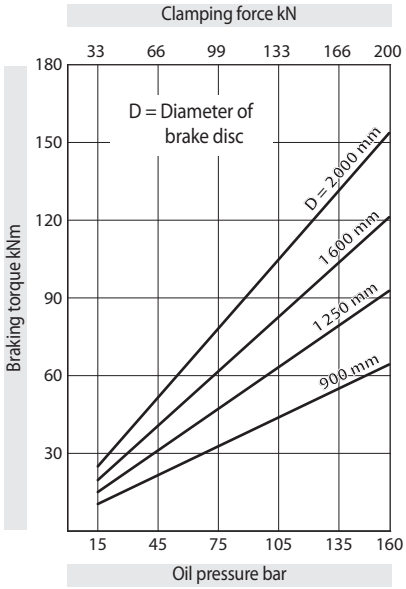

The braking torques shown in the diagram are based on a theoretical friction coefficient of 0,4.

Oil pressure:	min. 15 bar max. 160 bar
Oil volume:	max. 381 cm^3
Weight:	ca. 65 kg

Other features

- High safety against leakage
- Painted with surface coating class C4-L according to ISO 12944
- The thickness of the customer connecting part results from the thickness of the brake disc W

Accessories

- Optional painting with surface coating class C4-H or C5M-H (offshore) according to ISO 12944

Edmayr Antriebstechnik GmbH
Thalham 20, 4880 St. Georgen im Attergau
Tel.: +43 7667 6840 Fax: +43 7667 20070
office@edmayr.at www.edmayr.at

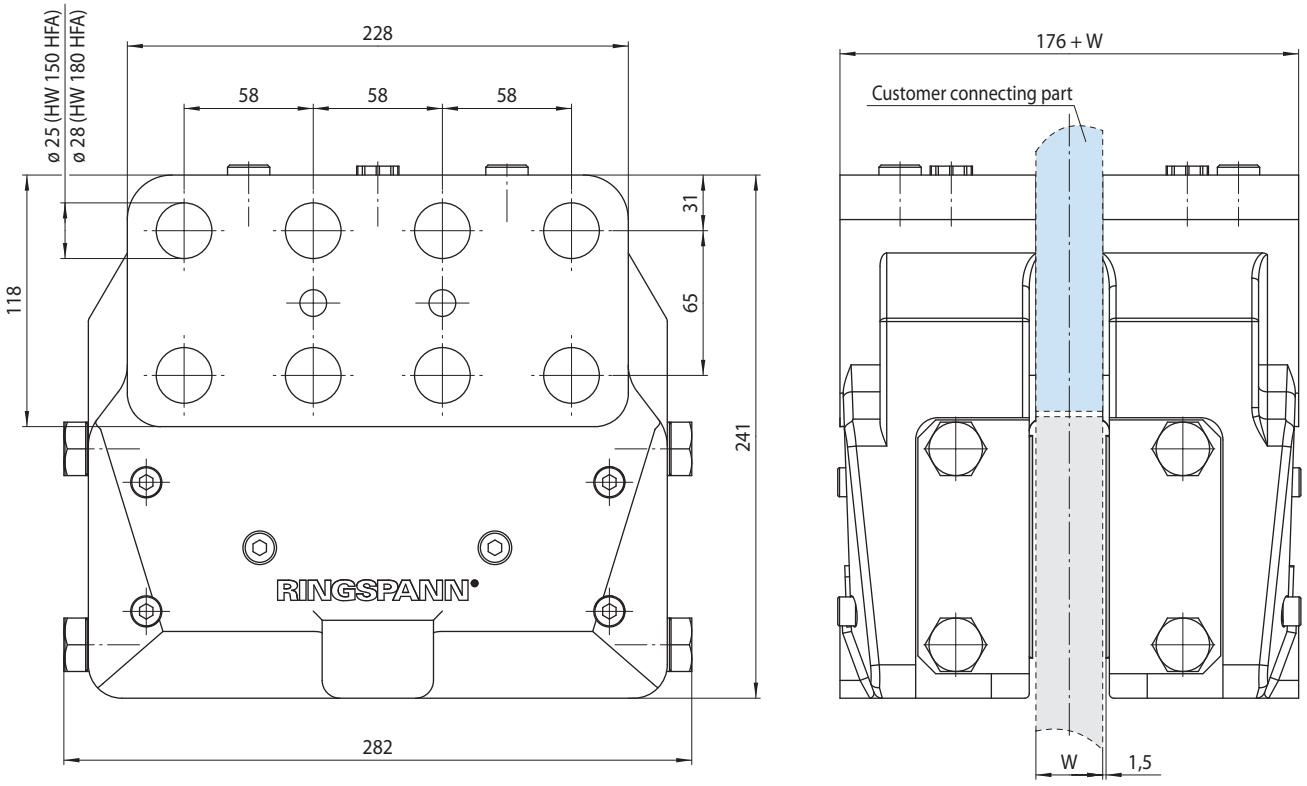

115-1

Mounting

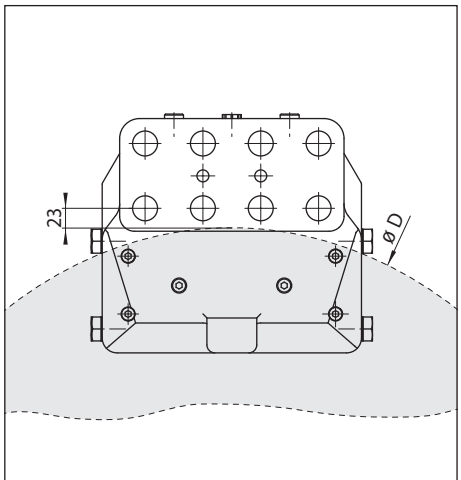

Mounting on the outer diameter of the brake disc 115-2

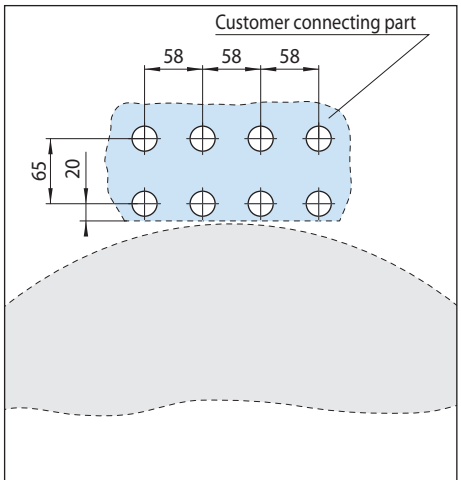

Dimensions of customer connecting part 115-3

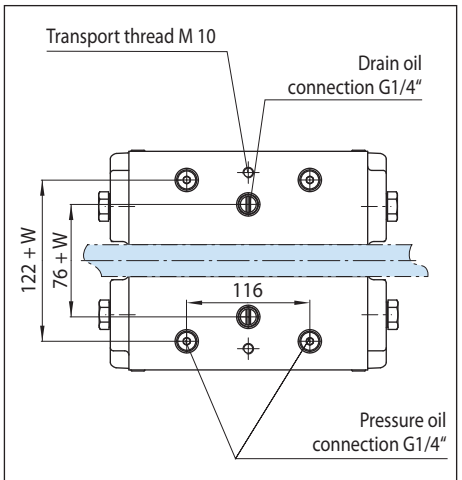

Supply connections 115-4

EDMAYR ANTRIEBSTECHNIK GmbH

Thalham 20
A-4880 St. Georgen im Attergau

Tel.: +43 7667 6840
Fax: +43 7667 20070

www.edmayr.at
office@edmayr.at