Brake Caliper DH 025 PFM

pneumatically activated – spring released

EDMAYR ANTRIEBSTECHNIK

Features	Code
Brake Caliper	D
Mounting to the machine at right angles to the brake disc	H
Frame size 025	025
Pneumatically activated	P
Spring released	F
Manual adjustment to accommodate friction block wear	M
Thrusters 635 or 655 are available	635 655
Thruster mounted right or left available	R L
Thickness of brake disc 12,5 mm or 25 mm	12 25

Example for ordering

Brake Caliper DH 025 PFM, thruster 635, thruster mounted right, thickness of brake disc 12,5 mm:

DH 025 PFM - 635 R - 12

Technical Data

Brake Caliper DH 025 PFM - 635

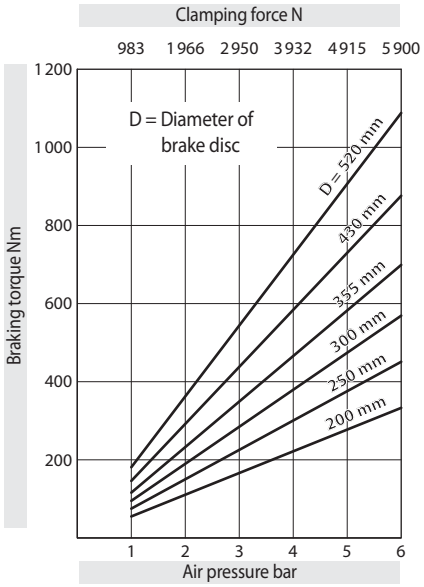

The braking torques shown in the diagram are based on a theoretical friction coefficient of 0,4.

Air pressure: max. 6 bar

Air volume: max. 175 cm^3 per activation

Weight: 7,1 kg

Brake Caliper DH 025 PFM - 655

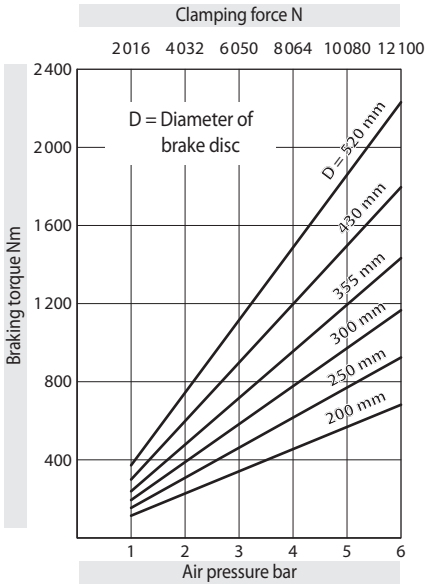

The braking torques shown in the diagram are based on a theoretical friction coefficient of 0,4.

Air pressure: max. 6 bar

Air volume: max. 740 cm^3 per activation

Weight: 10,3 kg

Edmayr Antriebstechnik GmbH
Thalham 20, 4880 St. Georgen im Attergau
Tel.: +43 7667 6840 Fax: +43 7667 20070
office@edmayr.at www.edmayr.at

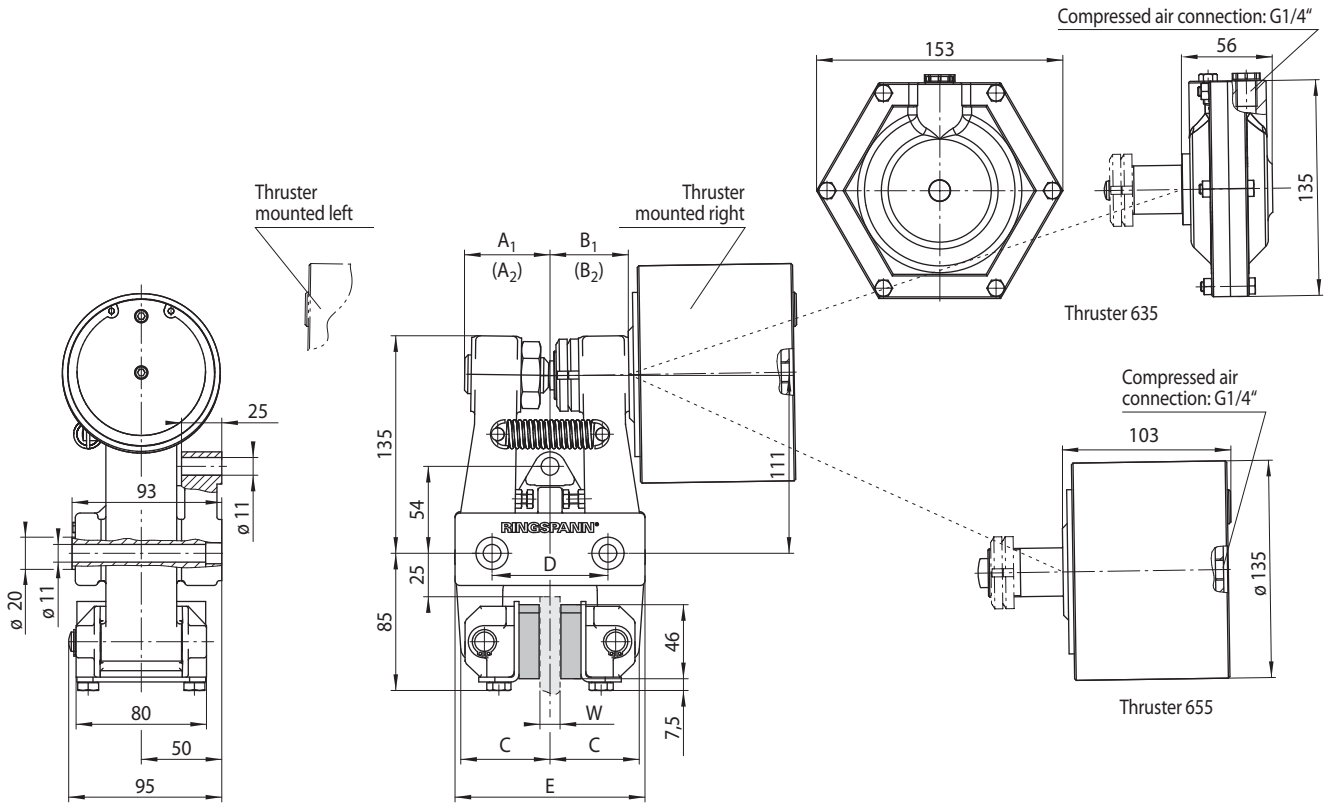

Thickness of brake disc W mm	A_1 mm	(A_2) mm	B_1 mm	(B_2) mm	C mm	D mm	E mm
12,5	54	(69)	49	(66)	55	72	118
25	60	(76)	56	(73)	62	84	130

Values in brackets resulting with maximum friction block wear.

65-1

EDMAYR ANTRIEBSTECHNIK GmbH

Thalham 20
A-4880 St. Georgen im Attergau

Tel.: +43 7667 6840
Fax: +43 7667 20070

www.edmayr.at
office@edmayr.at